ISBN 978-93-84422-22-6
Proceedings of 2015 International Conference on Image Processing, Production and Computer Science (ICIPCS'2015)
Istanbul (Turkey), June 3-4, 2015 pp. 59-67

A Fuzzy Logic Vector Control of Asynchroneous Machine

BellahseneHatem NouraRezika[1], Alkama Rezak[2] and Torchiat Ghilas[3]

[1,3]Department of Electrical Engineering, LTII laboratory Bejaia University,
Bejaia, 06000, Algeria
[2] Electrical Engineering Laboratory, Bejaia University,
Bejaia, 06000, Algeria

Abstract*: Increasingly, the fuzzy control replaces the conventional control methods, when it appears useful for controlling the processes are very difficult to analyze conventional techniques. The present work proposes the ambition to give a more or less general vision on the contribution brought by the fuzzy logic control field in an asynchronous machine, and to highlight the various beneficial aspects of this contribution. For this, we applied a fuzzy algorithm MAMDANI type for the control of MAS in order to highlight the achievements of several test results, and compare the two PI controllers and fuzzy PI. Moreover, the passage of the standard model to the model in the Park reference, facilitates the handling of equations and reduces the number of variables in the model. In order to evaluate the performance setting, the tested robustness relative to reference inputs, disturbances and parametric variations were considered.*

Keywords:*Asynchronous machines, vector control, Fuzzy logic, PI, Park transformation.*

1. Introduction

Today the asynchronous machine is the electric motor whose usage is the most replied in industry seen its advantages but its main problems are the nonlinearity and the strong coupling between its variables.The application of automatic techniques and modern electrical helped to make it usable. Furthermore, research has given a significant boost to the vector control and fuzzy logic control [1][2][3][4][5] [6][7][8]. The vector control has been proposed and developed as the coupling between the magnetic flux and electromagnetic torque. The strategy of the vector control or field oriented solution gave an indisputable control of AC machines [9] [10][11][12].

2. Modelisation of the Asynchronous Machine

A dynamic model of the asynchronous machine (MAS) subject to control must be known to understand and develop vector control [13][14][10][12]. The dynamic model of the MAS (Fig.1) must be a good approximation of the actual model, it should contain all the important dynamic effects encountered during the steady state and transient regimes, and it should be valid for any change in the supply of inverter such as voltages or currents. Such a model can be obtained using two axes of the theory of electrical machines. To arrive at a correct and easy to implement model, it is necessary to make certain assumptions which are intended to facilitate the equations of electrical circuits of the machine. Thus, it will be assumed that the inductances are constant, the mutual inductances are a function of the position of their magnetic axes and rotor resistances are constant relative to the rotational speed. The model we generated is given by the following equations:

Electrical equations

$$[V_s] = [R_s][I_s] + \frac{d}{dt}[\Phi_s] \quad (1)$$

$$[V_r] = [0] = [R_r][I_r] + \frac{d}{dt}[\Phi_r]$$

Magnetic equations

$$[\Phi_s] = [L_{ss}][I_s] + [M_{sr}][I_r] \quad (2)$$

$$[\Phi_r] = [L_{rr}][I_r] + [M_{sr}]^t\,[I_s]$$

Mechanic equations (3)

$$C_e = \frac{1}{2}[I_s]^t\left(\frac{d}{d\theta}[M_{sr}]\right)[I_r]$$

$$J\,\frac{d\Omega}{dt} + F\,\Omega = C_e - C_r$$

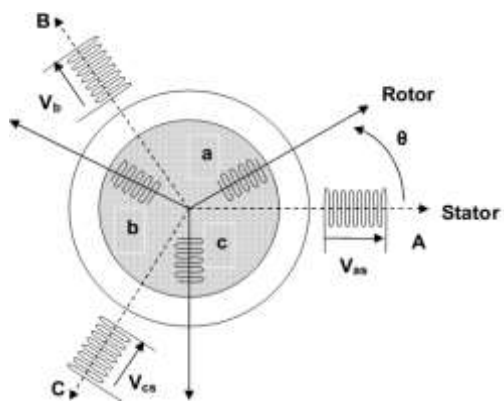

Fig. 1: Representation of a three phase MAS

2.1.Park Transformation of the Asynchronous Machine Model

The application of the Park transform leads the equations:

$$\begin{bmatrix} V_{ds} \\ V_{qs} \end{bmatrix} = \begin{bmatrix} R_s & 0 \\ 0 & R_s \end{bmatrix}\begin{bmatrix} I_{ds} \\ I_{qs} \end{bmatrix} + \frac{d}{dt}\begin{bmatrix} \Phi_{ds} \\ \Phi_{qs} \end{bmatrix} + \begin{bmatrix} 0 & -w_s \\ w_s & 0 \end{bmatrix}\begin{bmatrix} \Phi_{ds} \\ \Phi_{qs} \end{bmatrix}$$

$$\begin{bmatrix} V_{dr} \\ V_{qr} \end{bmatrix} = \begin{bmatrix} R_r & 0 \\ 0 & R_r \end{bmatrix}\begin{bmatrix} I_{dr} \\ I_{qr} \end{bmatrix} + \frac{d}{dt}\begin{bmatrix} \Phi_{dr} \\ \Phi_{qr} \end{bmatrix} + \begin{bmatrix} 0 & -w_r \\ w_r & 0 \end{bmatrix}\begin{bmatrix} \Phi_{dr} \\ \Phi_{qr} \end{bmatrix} \quad (4)$$

$$\begin{bmatrix} \Phi_{ds} \\ \Phi_{qs} \end{bmatrix} = \begin{bmatrix} L_s & 0 \\ 0 & L_s \end{bmatrix}\begin{bmatrix} I_{ds} \\ I_{qs} \end{bmatrix} + \begin{bmatrix} M & 0 \\ 0 & M \end{bmatrix}\begin{bmatrix} I_{dr} \\ I_{qr} \end{bmatrix}$$

$$\begin{bmatrix} \Phi_{dr} \\ \Phi_{qr} \end{bmatrix} = \begin{bmatrix} L_r & 0 \\ 0 & L_r \end{bmatrix}\begin{bmatrix} I_{dr} \\ I_{qr} \end{bmatrix} + \begin{bmatrix} M & 0 \\ 0 & M \end{bmatrix}\begin{bmatrix} I_{ds} \\ I_{qs} \end{bmatrix}$$

$\omega_s = \frac{d\theta_s}{dt}$, $\omega_r = \frac{d\theta_r}{dt}$, $L_s = l_s - m_s$:Cyclic stator inductance, $L_r = l_r - m_r$: Cyclic rotor inductance.

$M = \frac{3}{2}M_{sr}$: Cyclic mutual inductance between stator and rotor, p : Number of pole pairs of the machine.

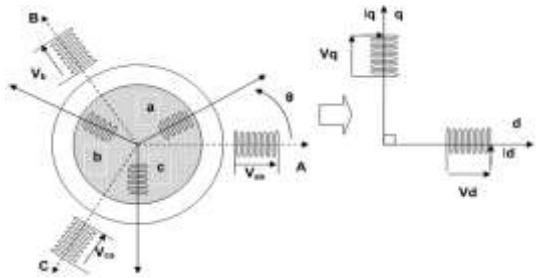

Fig. 2: Park model of the asynchronous machine

The equations of the machine can be further simplified by choosing a particular reference to d_q. The choice of reference is made according to the purpose of the application. Let the referential linked to the rotating field (d, q) characterized by:

$$\frac{d\theta_s}{dt} = \omega_s \text{et} \frac{d\theta_r}{dt} = \omega_s - \omega_r$$

This system is immobile relative to electromagnetic field created by the stator windings. This is the chosen repository in our study, because it has advantages when studying perturbations around a given point. It eliminates the influence of rotor and stator reactance leakage and gives better results. Writing in matrix form, we obtain the currents given in (Eq.5):

$$\begin{bmatrix} V_{ds} \\ V_{qs} \\ 0 \\ 0 \end{bmatrix} = \begin{bmatrix} (R_s + L_s S) & -L_s\omega_s & MS & -M\omega_s \\ L_s\omega_s & (R_s + L_s S) & M\omega_s & MS \\ MS & -\omega_{gl}M & (R_s + L_s S) & -\omega_{gl}L_r \\ \omega_{gl}M & MS & \omega_{gl}L_r & (R_r + L_r S) \end{bmatrix} \begin{bmatrix} I_{ds} \\ I_{qs} \\ I_{dr} \\ I_{qr} \end{bmatrix}$$

By putting all in a compact form:

$$[B][U] = [C][I] - w_{gl}[D][I] + [L][\dot{I}]$$

With: $[I] = [I_{ds} I_{qs} I_{dr} I_{qr}]^t$; $[\dot{I}] = S[I] = \frac{d}{dt}[I]$

$$[U] = [V_{ds} V_{qs} V_{dr} V_{qr}]^t [B] = \text{diag}\,[1\ \ 1\ \ 1\ \ 1]$$

$$[L] = \begin{bmatrix} L_s & 0 & M & 0 \\ 0 & L_s & 0 & M \\ M & 0 & L_r & 0 \\ 0 & M & 0 & L_r \end{bmatrix} ; \quad [C] \begin{bmatrix} R_s & -\omega_s L_s & 0 & -\omega_s M \\ \omega_s L_s & R_s & \omega_s M & 0 \\ 0 & 0 & R_r & 0 \\ 0 & 0 & 0 & R_r \end{bmatrix} ;$$

$$[D] = \begin{bmatrix} 0 & 0 & 0 & 0 \\ 0 & 0 & 0 & 0 \\ 0 & M & 0 & L_r \\ -M & 0 & -L_r & 0 \end{bmatrix}$$

$$I_{ds} = \frac{L_r}{L_s L_r - M^2}\Phi_{ds} - \frac{M}{L_s L_r - M^2}\Phi_{dr}$$

$$I_{qs} = \frac{L_r}{L_s L_r - M^2}\Phi_{qs} - \frac{M}{L_s L_r - M^2}\Phi_{qr} (5)$$

$$I_{dr} = \frac{L_s}{L_s L_r - M^2}\Phi_{dr} - \frac{M}{L_s L_r - M^2}\Phi_{ds}$$

$$I_{qr} = \frac{L_s}{L_s L_r - M^2}\Phi_{qr} - \frac{M}{L_s L_r - M^2}\Phi_{qs}$$

The determination of the instantaneous torque in a machine can be performed in two ways, by a sheet of instantaneous power or by the so-called "virtual work method. The relationship of the electromagnetic torque using the balance method of instantaneous power is expressed in terms of stator currents and rotor flux in the reference Park(d, q).

$$C_e = p\frac{M}{L_r}\left(\Phi_{dr} I_{qs} - \Phi_{qr} I_{ds}\right)$$

It is found that the electromagnetic torque equation is not linear. With using the vector control,we solve this problem.

2.2. Functional Diagram

Fig.3 shows the functional diagram of the model of Park and Fig.4 gives the functional diagram of controlled system of the asynchronous machine. "Source ~ 3" is a balanced three-phase voltage source 220V and 50Hz, the block "Live Park" calculates the components of the Park voltage network. "Inverse Park" can reconstruct the current absorbed. "Integrator" provides θ_s. The numerical values used in the MAS block were measured on a 1.5 kW motor [16][17].

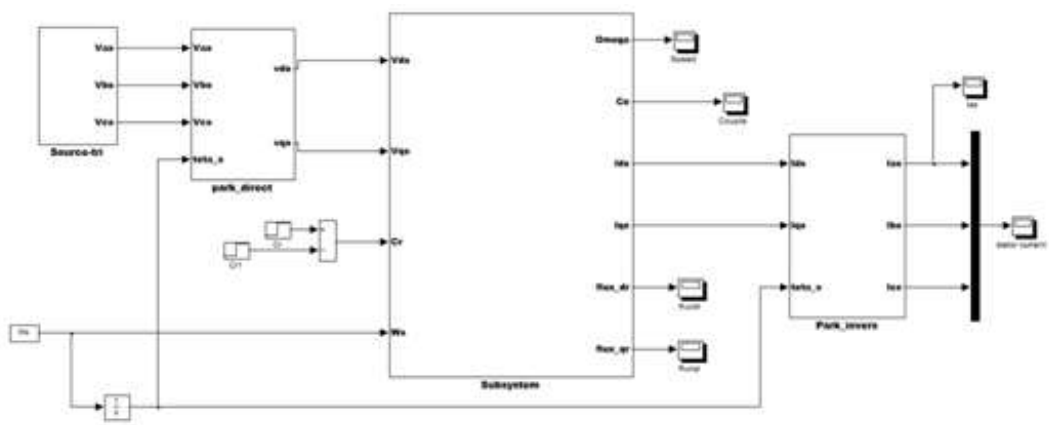

Fig. 3: Functional diagram of Park model

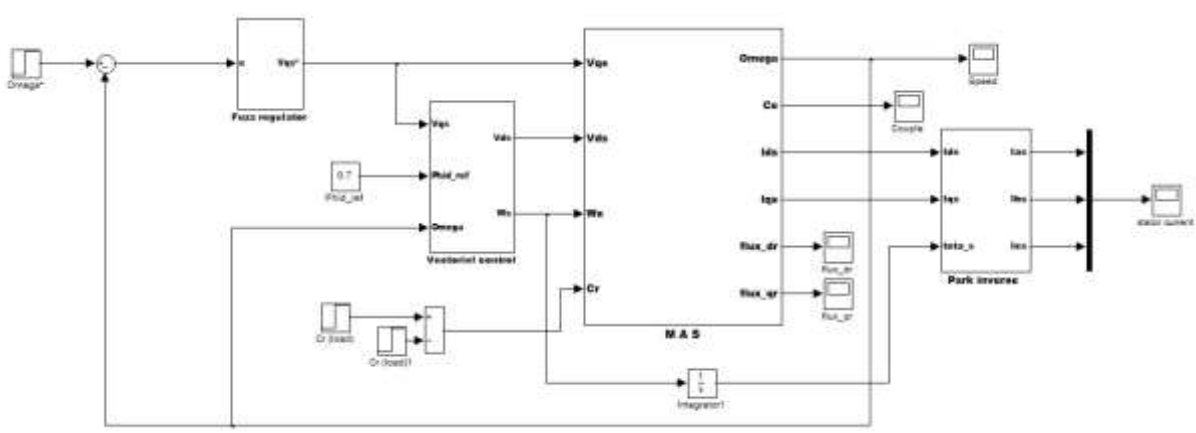

Fig. 4: Functional diagram of controlled system

3. Fuzzy Controller

For reasons of simplifications during simulation we adopt as membership functions, those have the triangular distributed uniformly and equidistantly with symmetrical shapes [15][2][5]. The range of interest of each input variables, the error e and the change in error d_e is divided into three classes (subsets). The variation of the command is also divided into three classes. For each of these classes, it is associated a membership function.

The decision table we chose in our work is the rule-based MAC VICAR-WHELAN. Fig.5 shows the area command of the controller.

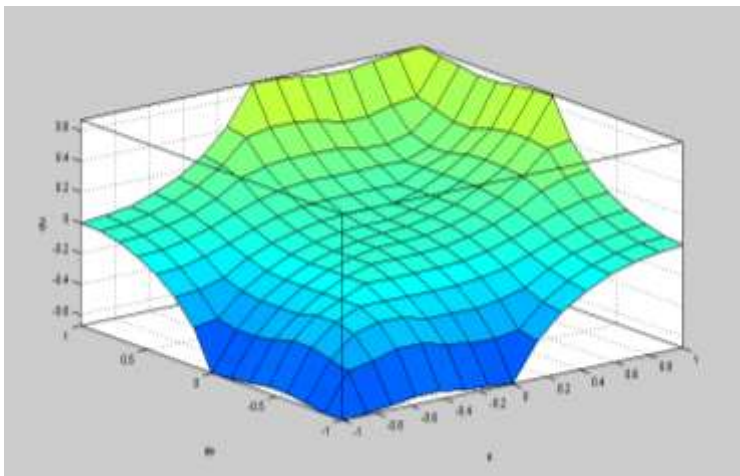

Fig. 5: Command area of the fuzzy controller

During operating of the machine, several parameters are subject to variations which may be due to the saturation or temperature rise. These variations can reach 50% in the case of electrical quantities and up to 100% in the case of inertia. It is therefore necessary to study the influence of the variation of the model parameters on the performance of the control to assess the robustness of the controller.

4. Simulation Results

The curves in Fig.6 detail separately the changing characteristics of the the MAS in charge of 10 Nm (disturbance) applied from 0.75 for 1s. When the shaft of the machine is loaded by a load torque level Cr = 10 Nm. Speed decreases to its nominal value (148 rad/s) for the nominal slip. The torque increases up to have the value that allows to train load. The stator current increases to its nominal value, the following quadrature axis stator current (Iqs) decreases and stabilizes at -5.2A. The rotor flux according to (d,q) increase and stabilize respectively - 1.05Wb and 0.1 Wb. An electromagnetic torque ripple and flux around the operating value is noted, this undulation is always due to the presence of power in which an effect on the machine, it creates higher order harmonics. This is due to the effect of natural coupling between the asynchronous machine torque and flux

Charge of 10 Nm (disturbance) applied from 0.75 for 1s. Speed decreases to its nominal value (148 rad / s) for the nominal slip. The stator current increases to its nominal value, the stator current decreases and stabilizes at− 5.2A. The rotor flux increase and stabilize respectively - 1.05 and 0.1 Wb. A torque ripple and flux around the operating value is noted, this undulation is due to the presence of food which has an effect on the machine, it creates higher order harmonics. This is due to the effect of natural coupling between the induction motor torque and flux. Figure 7 shows the difference between the control PI controller and fuzzy logic controller to a reference of 150 rad / s and a disturbance of 10 Nm 1.5 s after the start for 1s. After insertion of the load torque, the controllers return to their setpoints, the fuzzy controller is faster as compared to the other controller (IP). This difference is due to the fact that the response time of the PI controller is determined by its design, it always reaches its initial climb to catch 95% of the reference value. For the fuzzy controller, the excess is always acceptable.

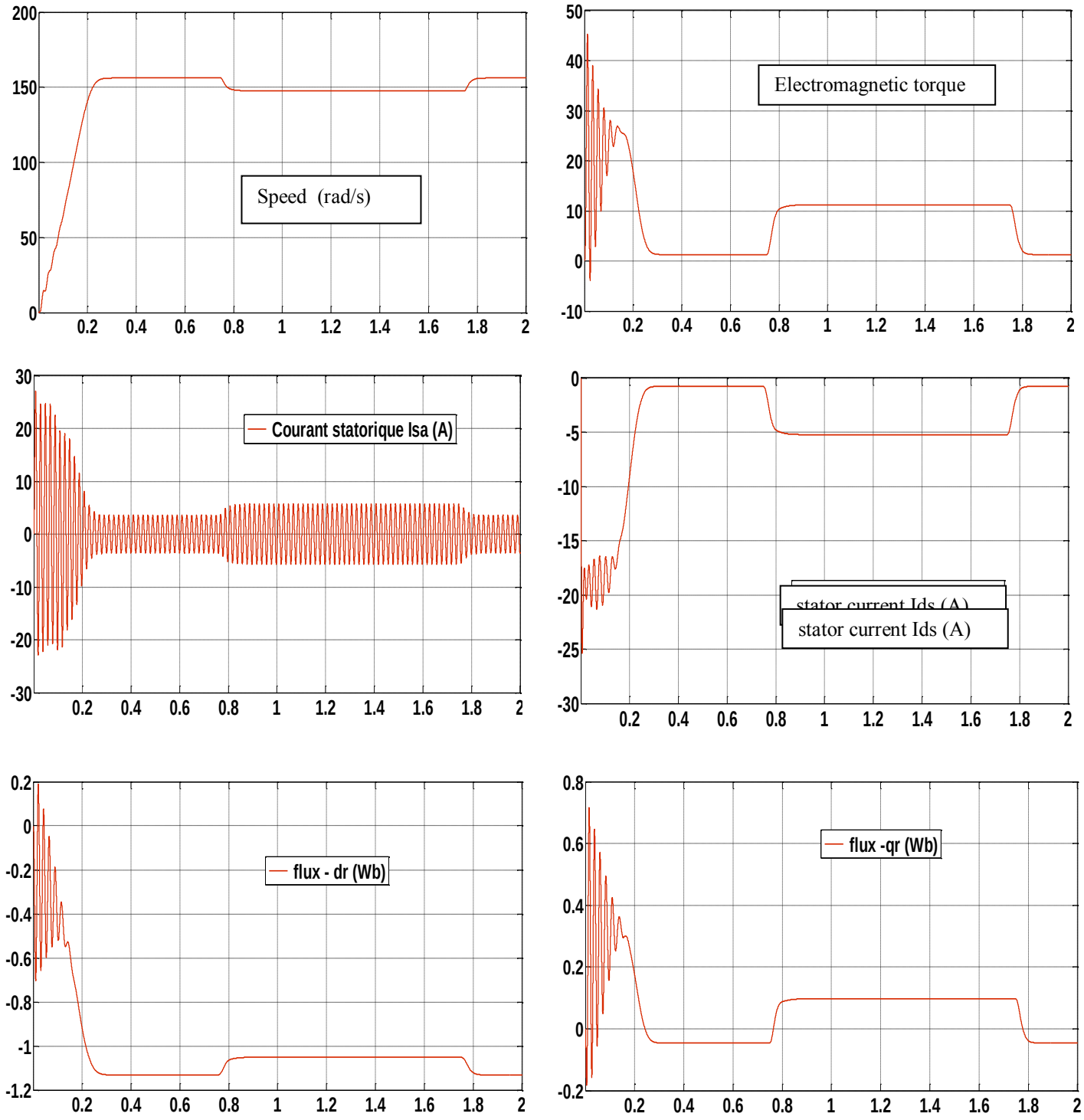

Fig. 6: Evolution of the characteristics of the MAS powered by a three-phase voltage followed by the application of load Cr= 10 Nm, 0.75 s after the start for 1 sec.

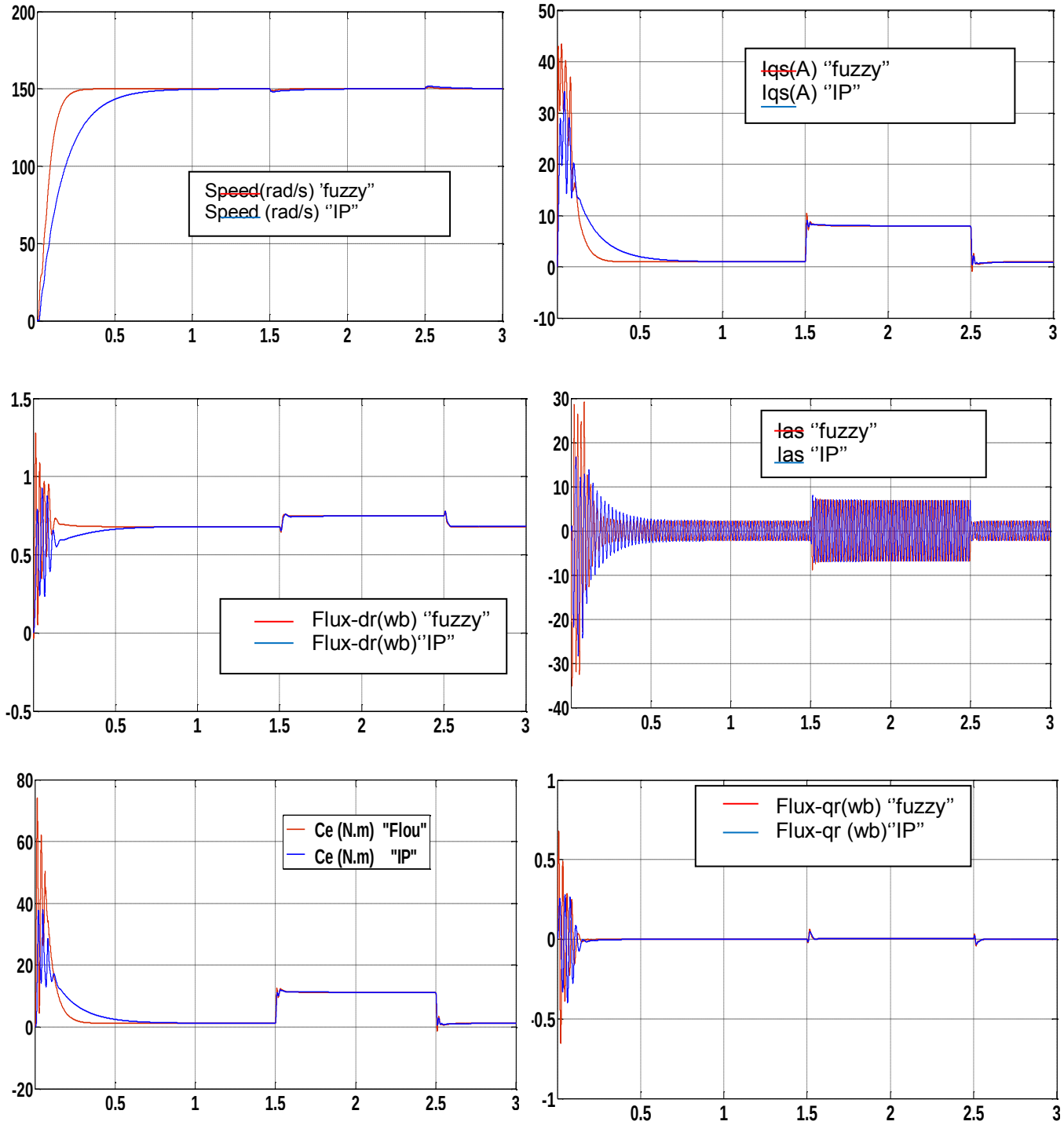

Fig. 7: Comparison of the characteristics of the simulated MAS controllers (PI and Fuzzy) to a reference of 150 rad/s and a disturbance of 10 Nm 1.5 s after the start for 1 sec.

5. Conclusion

In this paper, we have applied a fuzzy controller to an asynchronous machine. The simulation resultshave proved the efficiency of this command. The required performances are satisfied, such as the appreciable rising time, negligible exceeding, good following of references, rejection of the disturbance and the rapidity of inversion of the direction of rotation.Fuzzy control greatly improving the behavior and the effectiveness of

vector controland provides an efficient variable speed drive which is justified through the results obtained by comparing the vector control with classical PI controllers and controllers fuzzy logic.

The fuzzy controller improves the robustness of vector control, the simulations show that the errors converge to negligible static values that give good control results.

6. References

[1] Gang Feng, “A survey on analysis and design of model-based fuzzy control systems,” *IEEE Trans. Fuzzy. System*., vol. 14, no. 5, pp. 676–697, october 2006.

http://dx.doi.org/10.1109/TFUZZ.2006.883415

[2] C. C. Lee, “Fuzzy logic in control systems: Fuzzy logic control, part II,”*IEEE Trans. Systems. Man, and Cybernetics*, vol. 20, no. 2, pp. 419–433, March/April, 1990.

http://dx.doi.org/10.1109/21.52552

[3] B. Badr, A. Eltamaly, and A. Alolah, "Fuzzy controller for three phases induction motor drives," in Vehicle Power and Propulsion Conference (VPPC), 2010 IEEE, sept. 2010, pp.1 -6.

http://dx.doi.org/10.1109/vppc.2010.5729080

[4] W. Pedrycz and F. Gomide, Fuzzy Systems Engineering Toward Human- Centric Computing. Wiley-IEEE Press, 2007

[5] A. Kalantri, M. Mirsalim and H. Rastegar, “Adjustable speed drive based on fuzzy logic for a dual three-phase induction machine,” *Electrics Drives II, Electrimacs.* August 18–21, 2002.

[6] B. Badr, A. Eltamaly, and A. Alolah, "Fuzzy controller for three phases induction motor drives," in Vehicle Power and Propulsion Conference (VPPC), 2010 IEEE, sept. 2010, pp.1 -6.

http://dx.doi.org/10.1109/vppc.2010.5729080

[7] A. Mechernene, M. Zerikat, and S. Chekroun, "Indirect field oriented adaptive control of induction motor based on neuro-fuzzy controller," in Control Automation (MED), 2010 18th Mediterranean Conference on, june 2010, pp. 1109 -1114.

http://dx.doi.org/10.1109/med.2010.5547643

[8] Y. Zhao and T. A. Lipo, “Space vector PWM control of dual three phase induction machine using vector space decomposition,” *IEEE Trans. Ind. Appl.*, vol. 31, no. 5, pp. 1100–1109, September/October 1995.

http://dx.doi.org/10.1109/28.464525

[9] G. K. Singh, K. Nam and S. K. Lim, “A simple indirect field-oriented control scheme for multiphase induction machine,” *IEEE Trans. Ind.Elec*,vol. 52, no.4,pp.1177–1184, 2005.

http://dx.doi.org/10.1109/TIE.2005.851593

[10] D. Hadiouche, H. Razik and A. Rezzoug, “On the modeling and designof dual-stator windings to minimize circulating harmonic currents for VSI fed AC machines,” *IEEE Trans. Ind. Appl*., vol. 40, no. 2, pp. 506–515, March/April 2004.

http://dx.doi.org/10.1109/TIA.2004.824511

[11] L. Hakju, L. Jaedo, and S. Sejin, "Approach to fuzzy control of indirect field-oriented induction motor drives," in Industrial Electronics, 2001. Proceedings. ISIE 2001. IEEE International Symposium on, vol. 2, 2001, pp. 1119 -1123 vol.2.

[12] E. Y. Y. HO and P. C. SEN, “Decoupling control of induction motor drives,” *IEEE Trans. Ind. Elect.*, vol. 35, no 2, pp. 253–262, May 1988

http://dx.doi.org/10.1109/41.192657

[13] N. Quang and J. Dittrich, Vector Control of Three-Phase AC Machines. Springer, 2008

[14] M. Bertoluzzo, G. Buja, and R. Menis, "A direct torque control scheme for induction motor drives using the current model flux estimation," Diagnostics for Electric Machines, Power Electronics and Drives, 2007. SDEMPED 2007. IEEE International Symposium on, pp. 185 -190, sept. 2007.

http://dx.doi.org/10.1109/demped.2007.4393092

[15] M. M. Gupta and J. Qi, "Design of fuzzy logic controllers based on generalized t-operators," Fuzzy Sets and Systems, vol. 40, no. 3, pp. 473-489, 1991.

http://dx.doi.org/10.1016/0165-0114(91)90173-N

[16] Ribeiro, L.A.S,Jacobina, C.B. ; Lima, A.M.N. " Dynamic estimation of the induction machine parameters and speed'', Power Electronics Specialists Conference, PESC '95 Record., 26th Annual IEEE, 1995.

[17] M. Velez-Reyes , K. Minami and G.C. Verghese "Recursive speed and parameter estimation for induction machines", *Proc. IAS-89*, pp.607-611 1989.

http://dx.doi.org/10.1109/ias.1989.96712